GARAGE DOORS ROLLMATIC

NEW. Rolling shutter RollMatic T up to 4200 mm high and 6000 mm wide

HÖRMANN

Content

4 **Good reasons to try Hörmann**

14 **Inspirations**

20 **Design, equipment, accessories**

22 Profile versions and surface finishes

24 Colours and decors

26 Roller garage door RollMatic T

28 Roller garage door RollMatic

32 Garage horizontal door RollMatic OD

36 Optional extras

37 Side doors

38 Accessories

40 Dimensions and technical manual

Responsibility for generations

The Hörmann family business has over 90 years of experience as a construction component specialist. This gives us an obligation to both current and future generations. That's why environmental responsibility plays such an important role for us. With this in mind, we develop innovative solutions for sustainable products and intelligent environmental protection.

“A GOOD REPUTATION MUST BE EARNED.”

August Hörmann

In keeping with the tradition started by the company’s founder, the Hörmann brand is a true promise of quality and, with sales of over 20 million doors, door frames and operators, is one of Europe’s most successful suppliers. Due to the comprehensive international sales and service network, Hörmann is your strong partner for high-quality construction components.

WE THINK AND ACT GREEN. As a family business, we are very conscious of our responsibility to future generations and offer all products for residential construction CO_2-neutral as standard. The Hörmann sustainability strategy aims to reduce and avoid emissions. We cover 100% of our electrical power needs at all European production sites with genuine green electricity from renewable sources. We also apply many other measures to reduce our consumption and save more than 75000 tonnes of CO_2 each year. We work with ClimatePartner to offset the remaining emissions by supporting certified climate protection projects.

You can find further information at
www.hoermann.com/sustainability

ClimatePartner certified product
climate-id.com/XNEBKC

CO_2
measure
reduce
contribute

Brand quality made in Germany

The family-owned company Hörmann offers all important construction components for building and renovating projects from a single source. We manufacture in highly specialised factories using state-of-the-art production technologies. Our employees work intensively on new products, continual further developments and improvements to details. The results are patents and one-of-a-kind products you can depend on.

10-year warranty[1)]

LONG-LASTING. GUARANTEED. All major door and operator components are developed and manufactured by Hörmann. Endurance tests under real conditions ensure mature series products with Hörmann quality. Thanks to this and uncompromising quality assurance, you receive a 10-year warranty on all Hörmann roller garage doors RollMatic, RollMatic T and garage horizontal doors RollMatic OD, as well as a 5-year warranty on all Hörmann operators[1)].

[1)] The complete warranty conditions can be found at: www.hoermann.com

Only from Hörmann

Roller garage door with tension spring assembly

RELIABLE COUNTERBALANCE. The counterbalance system[2)] integrated in the side guides supports the operator during the opening and closing of the door and prevents damage to the operator mechanism. The multiple spring assemblies and the double cables prevent the door leaf from crashing in every position. In case of emergency, the door can be easily opened by hand. A crank handle [2)] is not necessary for this purpose for roller garage doors.

[2)] Not with roller garage door RollMatic T

Patented tension spring technology with spring-in-spring system for roller garage door RollMatic

Universally applicable

Roller garage doors and garage horizontal doors open vertically and offer maximum space inside and in front of the garage. The shape of the garage opening is not of prime importance when fitting the doors, whether the opening is rectangular or chamfered, or has a segmental or Norman arch. The RollMatic is also available as an external roller garage door for fitting in front of the garage opening for fitting situations with little sideroom.

ROLLER GARAGE DOOR ROLLMATIC T.
The inexpensive roller garage door with powerful tubular operator creates more room in front of and inside the garage. The door curtain is guided via a guide roller and guide channel and ensures smooth door travel.

➔ For further information, see from page 30.

ROLLER GARAGE DOOR ROLLMATIC.
The compact roller garage doors are the best choice if the ceiling area of your garage should remain free or if your garages are too small for a garage horizontal door or sectional door. The roller garage door curtain compactly winds up into the lintel of the door opening, thus allowing you to use the ceiling for lamps or as an additional storage space.

➔ Further information can be found starting on page 26.

GARAGE HORIZONTAL DOOR ROLLMATIC OD. For garages with a particularly low lintel, space-saving garage horizontal doors are especially suitable. The door curtain is guided under the ceiling through narrow booms. Thanks to the space-saving, lateral operator fitting, the RollMatic OD has a required headroom of only 60 mm.

➔ Further information can be found starting on page 32.

Permanently beautiful door appearance

Regular opening leaves marks on the door curtain due to the design of the roller garage door. In addition to the high-quality surface coating, innovative solutions such as special layer rings, the position of the roller and the DuraBelt reduce these marks to a minimum. This way you can enjoy your attractive door for a long time.

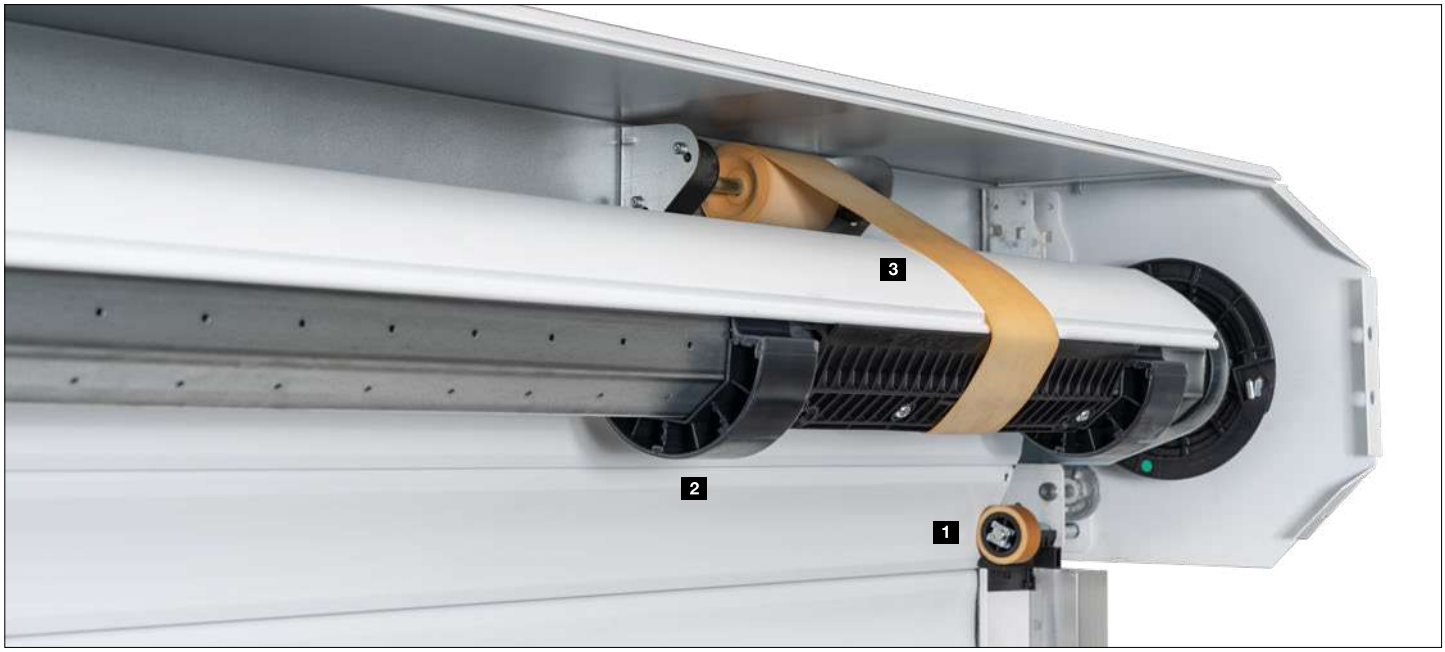

Only from Hörmann

Abrasion-resistant layer rings for rolling shutters

FEWER MARKS THANKS TO THE STANDARD DESIGN. The rollers 1 guiding the door curtain above the booms are positioned in such a way that design-related marks can only occur in the less visible area behind the booms. With the RollMatic and RollMatic T rolling shutters from 3000 mm door width, abrasion-resistant layer rings with a flocked surface also minimise 2 marks on the inside of the upper profiles.

Only from Hörmann

DuraBelt

ADDITIONAL SURFACE PROTECTION. Dirt can cause small scratch marks on the door curtain when it is rolled up. The DuraBelt 3 significantly reduces these scratches. When rolling up, several belts are placed between the individual layers of the door curtain, thus reducing the contact with the profiles to a minimum. The DuraBelt is available for almost all RollMatic roller garage doors and can also be retrofitted.

➔ Watch the video on YouTube or at www.hormann.co.uk/media-centre

Intelligent operating comfort

Control your garage door and entrance gate operators, door operators, entrance door locks, lights and other devices simply, safely and conveniently via hand transmitter, radio switch or smartphone. All operators, receivers and control elements with BiSecur radio technology are 100% compatible with each other.

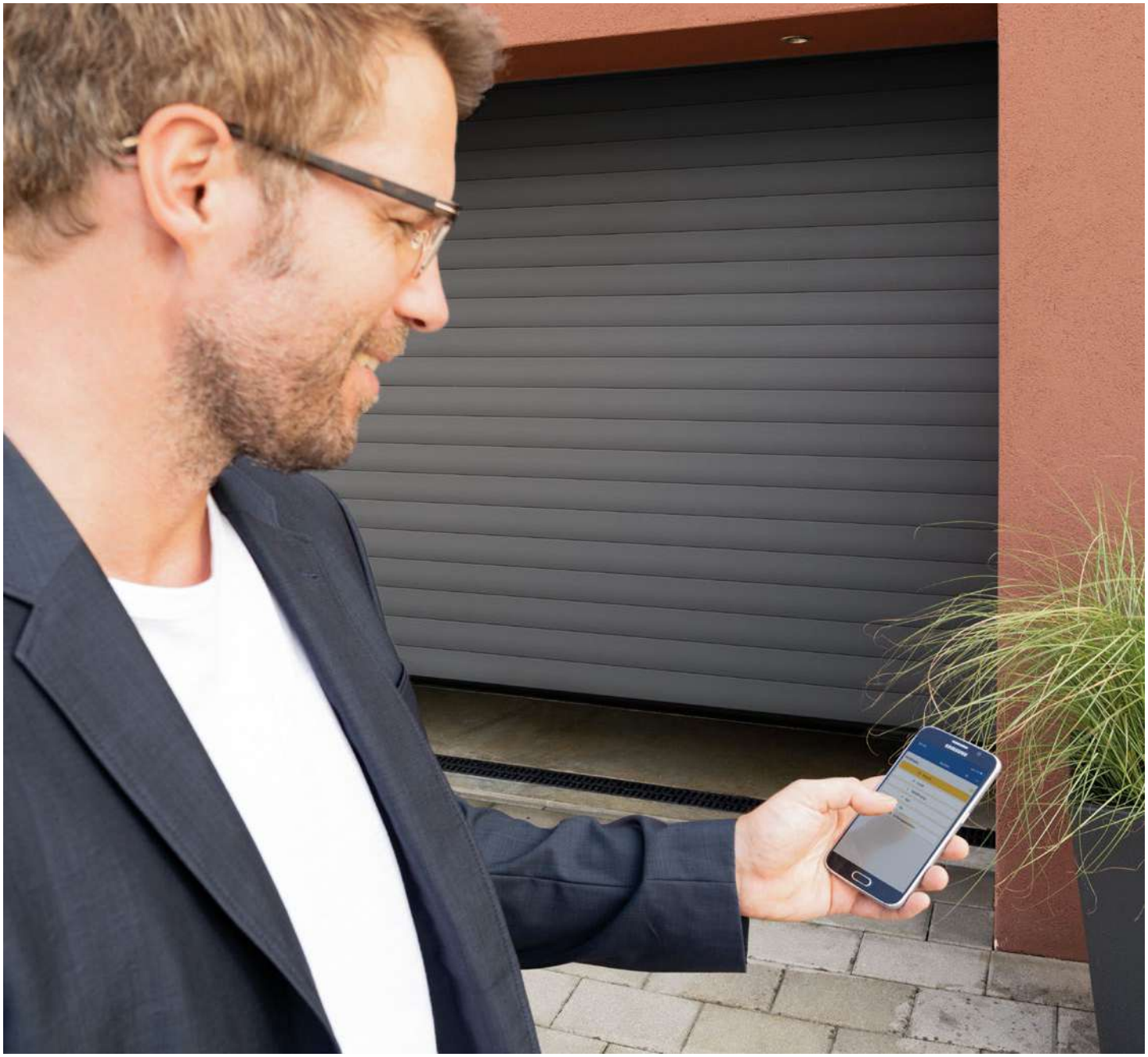

BiSecur

Only from Hörmann

CERTIFIED SAFETY. The bidirectional radio system BiSecur with particularly secure encryption protocol and stable, interference-free range makes sure that no one can copy your radio signal. This is also confirmed by the security experts of Bochum University and independent test institutes.

➔ Watch the video on YouTube or at www.hormann.co.uk/media-centre

INTELLIGENT TECHNOLOGY. Hörmann operators offer more convenience, smart functions and intelligent technology. Our elegant hand transmitters allow you to open your door from your car, for example. Or use your smartphone as a door opener with the Hörmann BlueSecur app[1] or the Hörmann homee smart home system[2].

➔ Watch the video on YouTube or at www.hormann.co.uk/media-centre

➔ Further information can be found starting on page 38.

[1] For roller garage door RollMatic T optionally in conjunction with the external HET-BLE
[2] For roller garage door RollMatic and garage horizontal door RollMatic OD

At the press of a button, the colour of the LED on the hand transmitter HS 5 BS or the internal push button FIT 5 BS indicates the door position[2].

With the Smart Home control centre homee, you can control all door functions via your tablet or smartphone[2].

The perfect match for your home

To perfectly match your door to the architectural style of your home, we offer the roller garage doors RollMatic. RollMatic T and the garage horizontal door RollMatic OD in 17 door colours. For an especially elegant door appearance, we recommend the colour Noir 2100 Sablé Anthracite metallic.

➔ For further information, see from page 24.

TOP. Roller garage door and side door in Moss green RAL 6005

BOTTOM LEFT. Detail of Noir 2100 Sablé

BOTTOM CENTRE. Roller garage door in Noir 2100 Sablé

BOTTOM RIGHT. Roller garage door in Traffic white RAL 9016

Natural door appearance

The particularly wear-resistant Decograin surface finish and the inexpensive Decopaint surface finish have a convincing real timber look.

➔ Further information can be found starting on page 25.

TOP LEFT. Roller garage door in Decograin Rosewood

TOP RIGHT. Detail Decograin Golden Oak

BOTTOM. Roller garage door in Decograin Golden Oak

External roller garage door

The RollMatic is also available as an external roller garage door for fitting in front of the opening if your garage has little headroom and / or sideroom. The external roller garage door is supplied as a complete package with a matching operator. The side guides and the curtain cover come in the same colour as the door, or in the basic colour of the decor for Decopaint, to create a uniform and harmonious appearance.

➔ Further information can be found starting on page 27.

Entrance gates

The RollMatic and RollMatic T roller garage doors can also be used as a compact and reliable entrance gate at the property boundary. A housing box reliably protects the control unit from adverse weather effects.

TOP LEFT. External roller garage door in Light grey RAL 7035

TOP RIGHT. Roller garage door and side door in Traffic white RAL 9016

BOTTOM LEFT. Roller garage door as entrance gate in Anthracite grey RAL 7016

Side doors

At Hörmann, side doors are given just as much consideration, Only when the door matches the entrance gate perfectly does it make a great overall impression. The side door NT 60 is thus available in all surface finishes and colours. The high-quality 60 mm aluminium frame construction forms the ideal frame for the door inlay; it is fixed with glazing beads as standard.

➔ Further information can be found starting on page 37.

ZABAG

Design Equipment Accessories

20 Design, equipment, accessories

22 Profile versions and surface finishes

24 Colours and decors

26 Roller garage door RollMatic T

28 Roller garage door RollMatic

32 Garage horizontal door RollMatic OD

36 Optional extras

37 Side doors

38 Accessories

40 Dimensions and technical manual

Profile versions and surface finishes

Roller garage doors RollMatic, RollMatic T and garage horizontal door RollMatic OD

Elegant aluminium profiles

The smooth surface of the aluminium profiles looks modern and elegant, unlike the ribbed profiles from other suppliers. Furthermore, a high-quality coating on the inside and outside of the door's surface makes it easy to clean. The hollow space of the profile is evenly filled with polyurethane rigid foam for quiet door travel.

Profile view of internal rolling shutters and garage horizontal doors

1 Inside of the door

2 Outside of the door

Profile view of external roller garage doors

1 Outside of the door

2 Inside of the door

Glazing elements 3

Get more daylight in your garage. The glazing elements with synthetic panes are arranged across the entire profile width. The number of elements depends on the respective door width. A maximum of ten profiles can be fitted with glazings in each door.

Ventilation grille 4

Ventilation of your garage improves the room climate and prevents mould. Ventilation grilles made of long-lasting plastic are arranged across the entire profile width. Each door can be equipped with a maximum of ten profiles.

Please note:
With respect to their technical properties and the paint system used, all Hörmann roller garage doors correspond to the current state of the art. Pressure marks and abrasive wear are design-related and cannot be avoided. They do not impair the function and the durability of the roller garage door.
To minimise abrasion on the door curtain due to the design, we recommend using the DuraBelt winding unit (further information can be found from page 26).

Decograin surface finish

A special abrasion-resistant surface protection preserves the UV-resistant plastic film coating on the profiles over a long time.

Profile view of internal rolling shutters and garage horizontal doors

1 Door interior in brown

2 Door exterior in Decograin Golden Oak

Decopaint surface finish

The profiles are painted on the interior and exterior to look like timber.

Profile view of internal rolling shutters and garage horizontal doors

3 Door interior in Decopaint Golden Oak

4 Door exterior in Decopaint Golden Oak

Profile view of external roller garage doors

3 Door exterior in Decopaint Golden Oak

4 Door interior in Decopaint Golden Oak

Colours and decors

Roller garage doors RollMatic, RollMatic T and garage horizontal door RollMatic OD

Equally-priced standard colours

Equally-priced standard colours

1	RAL 9016	Traffic white
2	RAL 9007	Grey aluminium
3	RAL 9006	White aluminium
4	RAL 9005	Jet black
5	RAL 9001	Cream
6	RAL 8028	Terra brown
7	RAL 7038	Agate grey
8	RAL 7035	Light grey
9	RAL 7016	Anthracite grey
10	RAL 7015	Slate grey
11	RAL 6005	Moss green
12	RAL 5011	Steel blue
13	RAL 3003	Ruby red
14	RAL 3004	Purple red
15	RAL 1015	Light ivory
16	Chartwell Green	

Please note:
All colours based on RAL.
The colours and surface finishes shown are subject to the limitations of the printing process and cannot be regarded as binding.
Please consult with your local Hörmann specialised dealer.

Special colour

Decograin surface finish

Decopaint surface finish

Special colour

17 Noir 2100 Sablé

Decograin surface finish

18 Decograin Golden Oak

19 Decograin Rosewood

Decopaint surface finish

20 Decopaint Golden Oak

21 Decopaint Rosewood

Harmonious overall appearance when it comes to colours

At no surcharge, Hörmann provides you with door curtains, booms, lintel trim and winding shaft cladding in your chosen door colour.

Fitting variants with Decograin surface finish

Roller garage door RollMatic fitting in the opening
Profile and booms in Decograin, fascia panel in the basic colour of the decor and additional fascia panel in Decograin (see page 36).

Roller garage door RollMatic fitting behind the opening
Profile in Decograin, fascia panel and booms in the base colour of the decor

Garage horizontal door RollMatic OD fitting in the opening or behind the opening
Profile in Decograin, fascia panel and booms in the base colour of the decor

Fitting variants with Decopaint surface finish

Roller garage door RollMatic / garage horizontal door RollMatic OD
Profile in Decopaint, fascia panel and booms in the base colour of the decor

Roller garage door RollMatic T

With space-saving tubular operator

Compact design with protected barrel
The compact winding shaft cover 1 practically prevents the door barrel from being penetrated and protects the curtain from damage and dirt when the door is open. An extruded aluminium section with a white powder-coated surface connects the barrel securely to the curtain. Narrow booms with brush seals 2 ensure smooth door travel and optimum sealing. **NEW.** Thanks to the roll-on bracket 3, the curtain is optimally inserted into the booms for doors from a height of 3000 mm.

Easy to install - even in tight fitting situations
The compact construction is quickly and easily screw-fitted to the lintel and side panels. The siderooms of the pre-drilled booms with standard profile backing are only 75 mm (up to 3000 mm door height) or 105 mm (from 3001 mm door width and 3001 mm door height). The barrel, which is already pre-assembled with layer rings, requires only 290 mm or 360 mm (for doors up to 4200 mm high) of required headroom. For quick fitting on doors up to 3000 mm wide and 2300 mm high, the winding shaft cladding can be ordered with a pre-assembled curtain. **NEW.** For wide doors with a high curtain weight, belt installation makes installation easier, as the curtain is simply pulled onto the barrel with a belt.

Additional surface protection and fewer running marks due to the design
The optional DuraBelt 4 counteracts scratch marks caused by dirt on the door curtain. It is available for doors up to 3000 mm high and can also be retrofitted to any internal or external rolling shutter. In addition, the rollers above the boom and the abrasion-resistant layer rings with a flocked surface reduce design-related running marks on the upper profiles of the door curtain for doors from 3000 mm wide.

➔ Further information can be found on page 11.

Emergency operation as standard (only for internal rolling shutters)
In the event of a power failure, the rolling shutter can be operated from the inside using an emergency crank handle or optionally from the outside through a lockable opening 5.

Space-saving tubular operator
The powerful tubular drives have mechanical or optionally electronically adjustable end-of-travel positions. The operator can be operated from the inside using the attractively designed control unit with integrated LED lighting.

Closing edge safety device as standard
An optosensor in the floor seal reliably stops the door in the event of obstacles - as standard with coil cable 6 or optionally with radio transmission 7.

Only from Hörmann
DuraBelt

4

5

6

7

Roller garage door RollMatic

With patented tension spring technology

Only from Hörmann

Roller garage door with tension spring assembly

Only from Hörmann

Abrasion-resistant ply rings with flocked surface

A well-protected barrel

The standard cover 1 of the barrel effectively prevents reaching into the door barrel. In addition, it protects the curtain from damage and soiling when the door is open.

Reliable counterbalance

The patented tension spring assembly with spring-in-spring system 2 and the transparent protective cover prevent broken springs from flying out and thus protect from personal injury.

Secure curtain guide

The standard wind locks 3 in the profile ends keep the door securely in the guide even under high wind loads (up to class 4) and also offer increased burglar protection.

Additional surface protection and fewer running marks due to the design

The standard rollers above the boom and the standard abrasion-resistant layer rings with flocked surface 4 reduce design-related running marks on the upper profiles of the door curtain. The DuraBelt 5 reduces scratch marks that can be caused by dirt on the door curtain. The DuraBelt can also be retrofitted to almost all doors.

➔ For further information, see page 11.

Easy fitting

The booms, fascia panel and operator are fitted to the garage walls and lintel. The curtain is then pulled effortlessly onto the barrel by the operator and fixed via belts 6.

External roller garage door

Depending on the fitting situation, operators can either be installed on the left or right. The shaft cover is 100 mm wider in this area and encloses the operator 7, protecting it from adverse weather effects or from unauthorised interference. The vision fields 8 in the spring cover allow you to conveniently check whether the cable guide or springs are still functional. This gives you security even after many years of use.

Only from Hörmann

DuraBelt

5

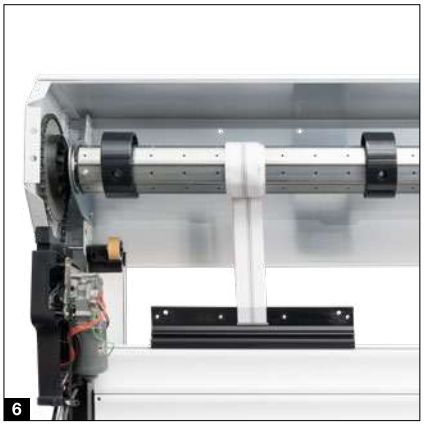

6

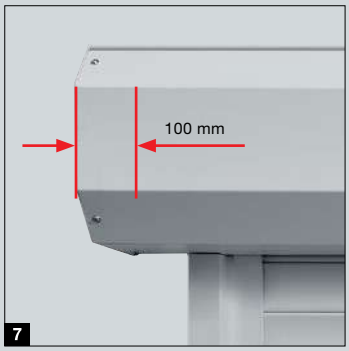

7

8

Roller garage door RollMatic

Operator and control RollMatic

Standard operator, fitted outside of the cover for trouble-free maintenance

- 20% faster opening speed* up to 17 cm/s
- Smart operation with the BlueSecur app
- Control with “Open / Close” buttons for inside operation
- Easy-to-use programming thanks to 2 × 7-segment display
- Networked with Smart Home systems via the standard HCP interface
- Bright LED lighting
- Low power consumption in standby below 1 watt
- Electronic end-of-travel position cut-out to protect the curtain surface
- Convenient garage ventilation
- Additional opening height

BiSecur

As standard with two 4-button hand transmitters HSE 4 BS, textured surface black with plastic caps

Garage door operators

Bluetooth receiver	Integrated, can be switched on and off
HCP bus connection	Integrated
Cycles per day / hour	25 / 10
Max. opening speed	17 cm/s
Lighting	10 LEDs
Max. door width	6000 mm
Max. door surface	15 m²

* Compared to series 1

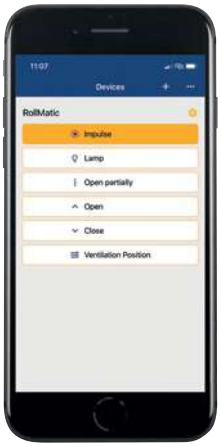

Only from Hörmann

European patent

Hörmann BlueSecur

Operation by smartphone using the Hörmann BlueSecur app

Closing edge safety device
An optosensor in the bottom seal 1 reliably stops the door in the event of an unexpected obstacle – optional for doors up to 5000 mm wide and standard for doors from 5000 mm.

Emergency release from inside
You unlock the operator of the internal rolling shutter directly in the garage using a Bowden cable. The external rolling shutter is released via an inward opening that can be locked from the outside. Thanks to the spring compensation, the door curtain can then be opened easily by hand in both latches.

Emergency release from outside (optional)
For garages without a second entrance, we recommend the secured release in a lockable housing 2, allowing you to open your garage door from the outside in case of an emergency (e.g. power failure).

Emergency power supply (optional)
With the emergency battery 3, you can bridge network power failures for up to 18 hours and max. 5 door cycles. Recharges during normal operation.

Acoustic alarm (optional)
The shrill alarm sound with a volume of 110 dB (A) effectively deters burglars.

Manually operated door with manual door locking
The tension spring balancer allows internal rolling shutters to be opened and closed easily by hand - externally via the handle 4, internally via the chain hoist with chain tensioner 5. The manually operated door is locked via inside and outside handles and a lock, with sturdy metal bolts engaging in the booms on the right and left.

1

3

2

4

5

Garage horizontal door RollMatic OD

Ideal for modernisation

Smooth door travel
Twin rollers evenly and smoothly guide the door curtain under the ceiling. The narrow aluminium booms are connected by stable corner diversions with small radii 1. Due to this compact design, the garage horizontal door RollMatic OD only requires a lintel of 60 mm.

Well-sealed
The door is almost completely closed in the lintel area thanks to the specially shaped folding roller bracket 2. An elastic lip seal in the lintel area and brush seals in the booms protect against driving rain (class 2). The flexible EPDM bottom profile compensates for unevenness in the floor and seals the bottom edge of the door.

Reliable counterbalance
The multiple spring assemblies and integrated catch safety device 3 protect the door from crashing in the event of a possible cable tear.

Additional emergency release
We recommend using an optional emergency release lock 4 for garages without a second entrance. An inconspicuous round cylinder (cannot be integrated in the master key system) releases your garage door and you can easily open it in case of emergency.

Variable fitting
The vertical booms and the fascia panel are supplied in the colour of the door as standard. Thus the door can also be fitted partially or completely in the opening.

Simple modernisation
Using the optional retrofit fascias 5, the door is fitted in the reveal and at the same time covers unattractive gaps in the lintel and reveal area. Additional brickwork and plastering work are no longer required.

Size range
Max. width 3500 mm
Max. height 3000 mm

Space-saving operator fitting*
The operator booms 6 can either be fitted on the right or the left horizontal boom. This compact design does not require additional headroom.

Emergency power supply
The HNA* 7 emergency battery for ProMatic and SupraMatic garage door operators bridges mains power failures for up to 18 hours and a maximum of 5 door cycles. Recharges during normal operation.

* Shown with optional operator SupraMatic

4

5

7

Garage horizontal door RollMatic OD

ProMatic 4 operator

Standard operator in premium quality

- 40% faster opening speed* up to 20 cm/s
- Convenient garage ventilation
- Additional opening height
- Up to 2 times* brighter LED lighting
- Networked with Smart Home systems via the standard HCP interface
- Low power consumption in standby below 0.6 watt

BiSecur

As standard with two 4-button hand transmitters HSE 4 BS, textured surface black with plastic caps

Garage door operators	ProMatic 4	ProMatic 4 Akku
Bluetooth receiver	Optional (HET-BLE)	Optional (HET-BLE)
HCP bus connection	Integrated	Integrated
Cycles per day / hour	25 / 10	5 / 2
Pull and push force	600 N	500 N
Peak force	750 N	600 N
Max. opening speed	20 cm/s [1)]	16 cm/s [1)]
Lighting	10 LEDs	10 LEDs

* In comparison with the ProMatic series 3

ProMatic 4 Akku

For garages without power connection

Akku with solar module

Supra-fast door opening and smart additional functions

- 75% faster opening speed* up to 25 cm/s
- Smart operation with the BlueSecur app
- Convenient garage ventilation
- Additional opening height
- Up to 3 times (SupraMatic E) or 5 times* (SupraMatic P) brighter LED lighting
- Easy-to-use programming thanks to double 7-segment display
- High-quality operator cover in stainless steel design
- Networked with Smart Home systems via the standard HCP interface
- Low power consumption in standby below 0.6 watt

BiSecur

As standard with two 4-button hand transmitters HSE 4 BS, textured surface black with chrome caps

Garage door operator	SupraMatic E
Bluetooth receiver	Integrated, can be switched on and off
HCP bus connection	Integrated
Cycles per day / hour	25 / 10
Pull and push force	650 N
Peak force	800 N
Max. opening speed	25 cm/s
Lighting	20 LEDs

* In comparison with the ProMatic series 3

Only from Hörmann

European patent

Hörmann BlueSecur

Operation by smartphone using the Hörmann BlueSecur app

Optional extras

Roller garage doors RollMatic and RollMatic T

Chamfered bottom profile
(only for RollMatic T and RollMatic)
The solution for sloping ground: a chamfered aluminium bottom weather seal compensates for differences in height over the entire door width (max. 300 mm).
The profile can be fitted without any difficulty. It is simply screwed onto the inserted curtain.
The bottom profile is delivered powder-coated in Jet black (similar to RAL 9005) as standard. On request, the bottom profile 1 is also available in a colour matching the door colour.

Additional fascia panel
The additional fascia panel 2 stabilises the fascia panel when fitted in the opening or behind the opening if the fascia panel is visible in the opening. It harmoniously covers the lintel without any unattractive fitting holes.
The additional fascia panel is available in the door colour or with Decograin surface finish.

Fitting compensation set
With uneven walls, the optional fitting compensation set 3 for flush door fitting can be applied.
This is particularly advantageous for modernisations or timber building structures.

➔ For more information, consult the technical manual at www.hoermann.de

1

2

3

Door sizes

- Width 875 – 1284 mm
- Height 1800 – 2500 mm

Standard equipment

- 60 mm thick weather-resistant aluminium profiles in the colour of the profiles or, in the case of Decopaint, in a colour matching the decor 1
- Black plastic lever handle set with oval rose escutcheons and profile cylinder lock 2
- 3-way adjustable hinges 3 optionally in black, white or aluminium natural finish

Optional equipment

- Concealed hinges for an elegant door appearance 4
- Lever/knob handle set in natural aluminium 5, cast aluminium RAL 9016 6, brushed stainless steel 7
- Overhead door closer with slide rail and hold-open device
- 3-point locking (latch, bolt and 2 locking hooks)

Accessories

Hand transmitter

BiSecur

HS 5 BS
4 button functions plus query button, high-gloss surface black or white

HS 5 BS
4 button functions, plus query button, textured surface matt black

HS 4 BS
4 button functions, textured surface matt black

HS 1 BS
1 button function, textured surface matt black

HSE 1 BS
1 button function, including eyelet for key ring, textured surface matt black

HSE 4 BS
4 button functions, incl. eyelet for key ring, textured surface matt black with chrome or plastic caps

HSE 4 BS
4 button functions, incl. eyelet for key ring
High-gloss finish with chrome caps,
Colours (pictured from left): White, anthracite grey, Frozen Grey, **NEW.** Rose gold, Carbon, Silver

HSD 2-C BS
High-gloss chrome,
2 button functions, can also be used as a key ring

HSZ 1 BS / HSZ 2 BS
1 or 2 button functions, for insertion in vehicle cigarette lighter

HSI 3 BS
To control up to 3 doors, with extra-large buttons, impact-resistant housing, protection category: IP 65

HSI 6 BS
To control up to 6 doors, with extra-large buttons, impact-resistant housing, protection category: IP 65

Radio code switch
FCT 3 BS
3 functions, with illuminated buttons, recessed or surface-mounted fitting possible, plastic housing in Light grey RAL 7040 (also available with 10 functions and hinged cover, painted in White aluminium RAL 9006)

Radio code switch
FCT 10 BS
10 functions, with illuminated buttons and hinged cover, recessed or surface-mounted fitting possible, plastic housing painted in RAL 9006 White aluminium

Radio finger-scan
FFL 25 BS
2 functions and up to 25 fingerprints, with hinged cover, recessed and surface-mounted fitting possible, plastic housing painted in RAL 9006 White aluminium

Radio internal push button
FIT 5 BS
4 button functions plus query button, plastic housing in Pure white RAL 9010

Button

Radio internal push button
FIT 2-1 BS
2 functions, connection option for max. 2 control elements via cable, e.g. key switch, plastic housing in Pure white RAL 9010

Internal push button
IT 1b-1
Large, illuminated button for convenient opening of the door, plastic housing in Pure white RAL 9010

Transponder key switch
TTR 1000-1
1 function, 1000 teachable keys, scope of delivery: 1 key and 1 card (more on request), zinc die-cast housing in White aluminium RAL 9006

Code switch
CTP 3-1
3 functions, with illuminated lettering and touch-sensitive black surface, zinc die-cast housing in White aluminium RAL 9006

Code switch
CTV 3-1
3 functions, particularly robust with metal keypad, zinc die-cast housing in White aluminium RAL 9006 with stainless steel panel

Finger-scan
FL 150
2 functions, control via fingerprint, up to 150 savable fingerprints, zinc die-cast housing in White aluminium RAL 9006 with stainless steel panel

Key switch
1 **STUP 50**
2 **STAP 50**
Recessed version and surface-mounted version, incl. 3 keys, zinc die-cast housing in White aluminium RAL 9006 with stainless steel panel

Internal climate sensor HKSI 3
For monitoring humidity and automatic ventilation of the garage, plastic housing in Pure white RAL 9010
External sensor HKSA 4
For measuring outdoor humidity, plastic housing in Pure white RAL 9010

Dimensions and technical manual

Roller garage door RollMatic T

Door appearance

Internal and external rolling shutter

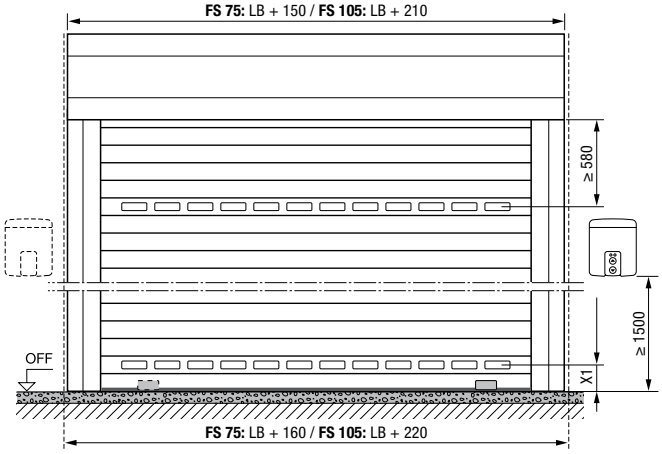

Side guides

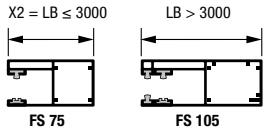

Fitting behind the opening

Internal rolling shutter

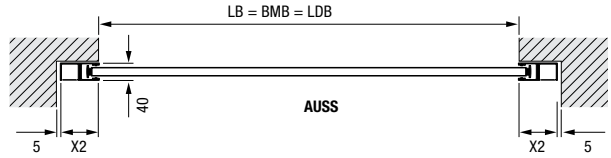

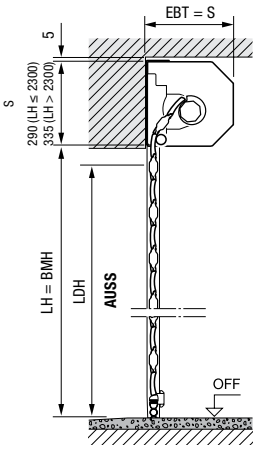

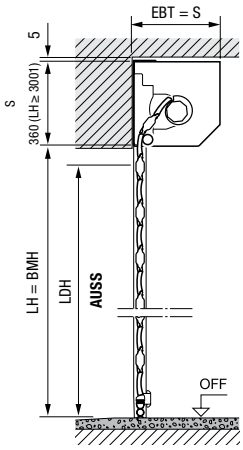

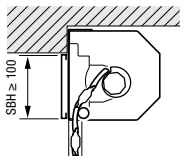

Additional fascia panel protrudes into the opening.

Fitting in the opening

Internal rolling shutter

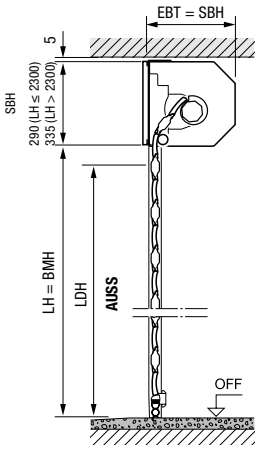

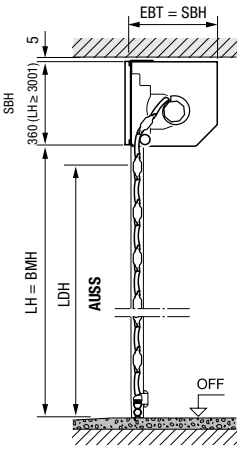

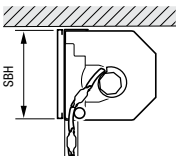

An additional fascia panel is required!

Dimensions in mm

Size range for internal and external roller garage doors

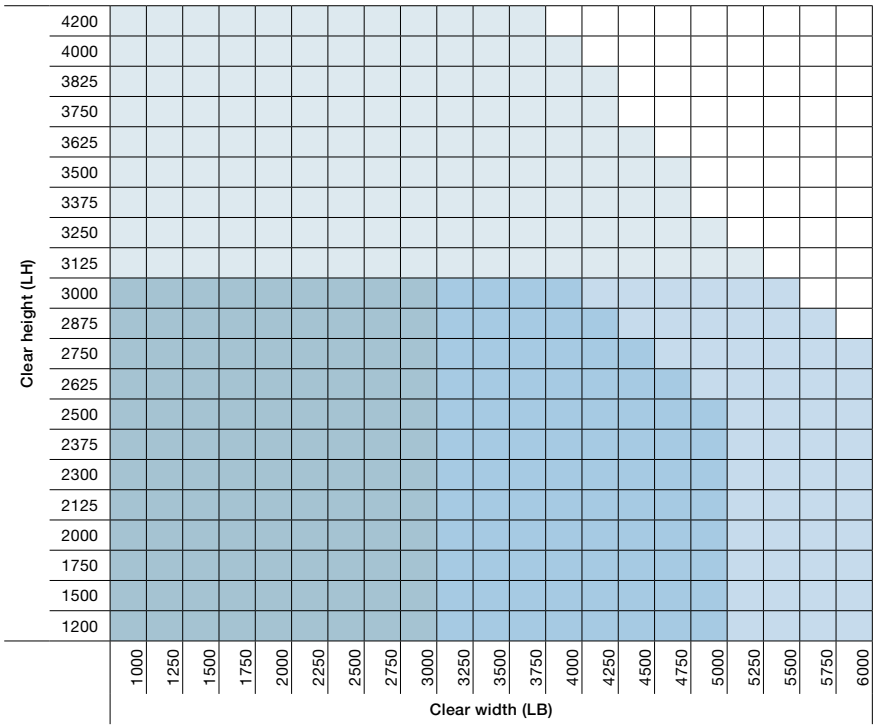

fitting in front of the opening

External roller garage door

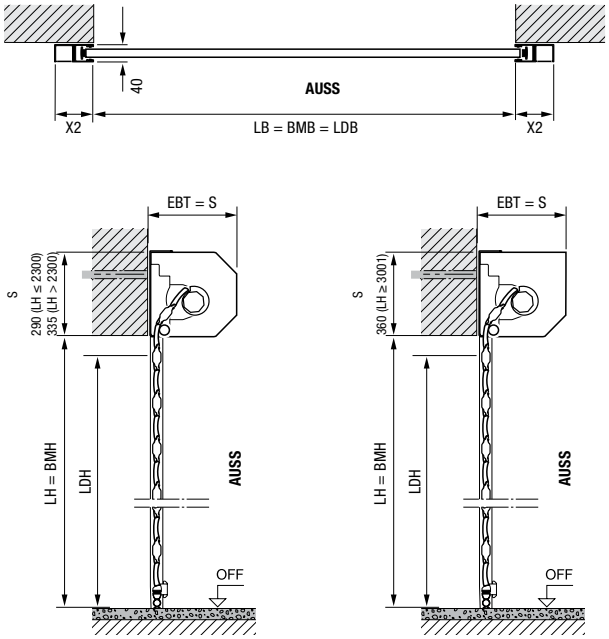

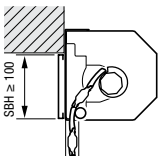

Additional fascia panel protrudes into the opening.

Dimensions in mm

Explanations

Boom FS 75, with DuraBelt, shaft 70 mm

Boom FS 105, with DuraBelt, shaft 80 mm

Boom FS 105, Roll-on bracket, with DuraBelt, shaft 80 mm

Boom FS 105, Roll-on bracket, no DuraBelt, shaft 80 mm

BMB	Ordering size width
BMH	Ordering size height
LB	Clear width
LH	Clear height
LDB	Clear passage width
LDH	Clear passage height
EBT	Fitting depth
S	Required headroom
SBH	Additional fascia panel height
OFF	Finished floor level (FFL)
AUSS	Exterior
X1	Min. 150 mm
X2	LB ≤ 3000 = 75 mm (FS 75) LB > 3000 = 105 mm (FS 105)

Fitting depth EBT **Required headroom S** **Additional fascia panel SBH**	
up to LH 2300 mm	290 mm
from LH 2301 to LH 3000 mm	335 mm
from LH 3001 to LH 4200 mm	360 mm

Clear passage height LDH	LH – 90 mm

Side space requirement	
FS 75	80 mm
FS 105	110 mm

Performance characteristics according to European standard 13241

Thermal insulation	
U-value installed door[1)]	5.0 W/(m²·K)

Wind load classes	
Without wind lock	
Up to LB = 3000 mm	Class 3
With wind lock	
Up to LB = 4000 mm	Class 4
Up to LB = 4500 mm	Class 3
From LB = 4500 mm	Class 2

The U-values for fitted doors without glazing elements with the dimensions 2500 × 2000 mm

Dimensions and technical manual

Roller garage door RollMatic

Door appearance

Internal rolling shutter

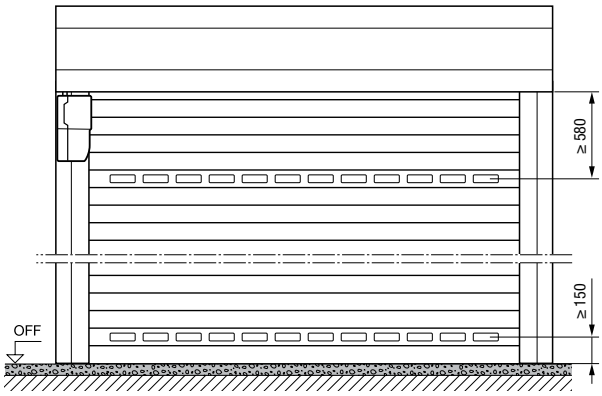

Door appearance

External roller garage door

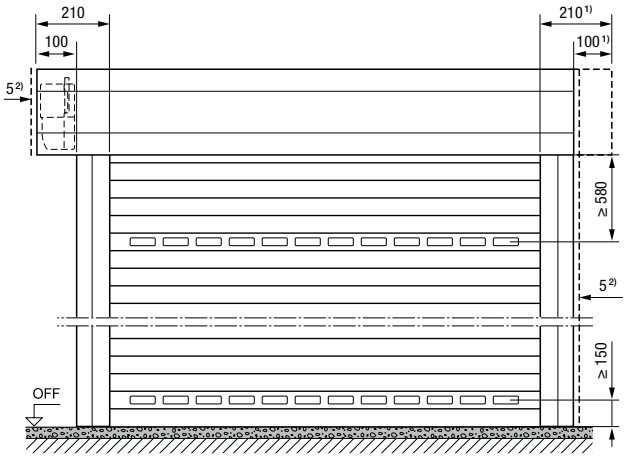

Fitting behind the opening

Internal rolling shutter, fitting side view

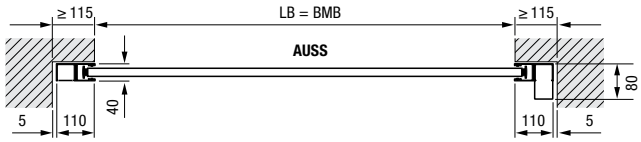

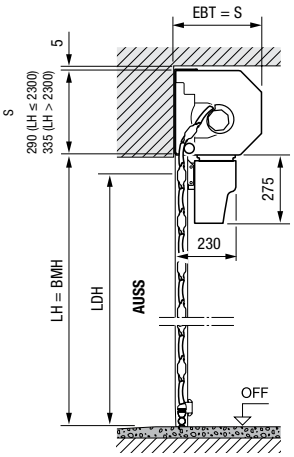

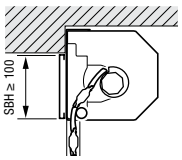

Additional fascia panel protrudes into the opening.

Fitting in the opening

Internal rolling shutter, fitting side view

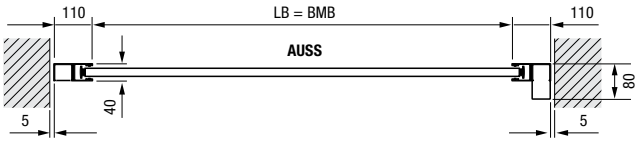

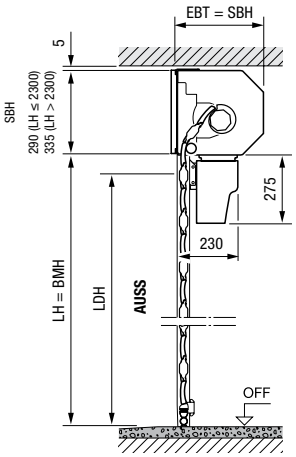

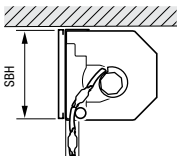

An additional fascia panel is required!

Dimensions in mm

Size range for internal and external roller garage doors

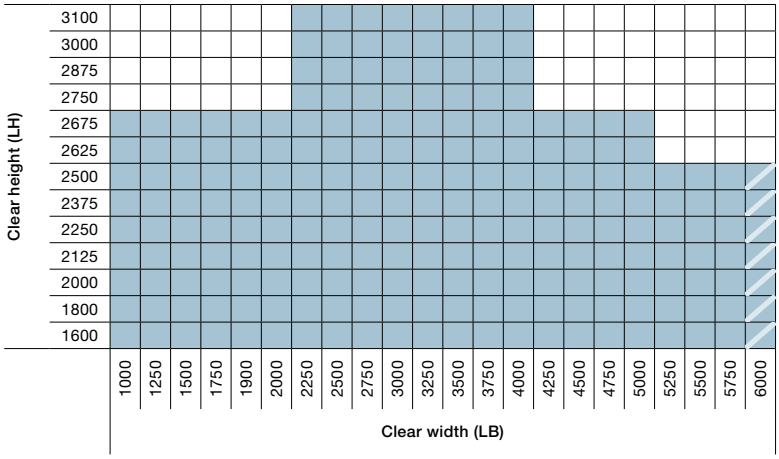

Internal and external rolling shutters

No symmetrical curtain cover for external rolling shutters

fitting in front of the opening

External rolling shutter, fitting side view

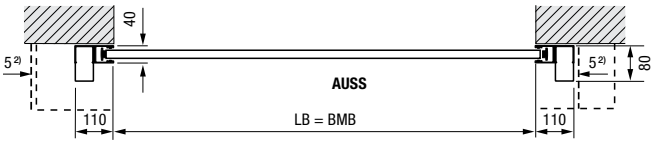

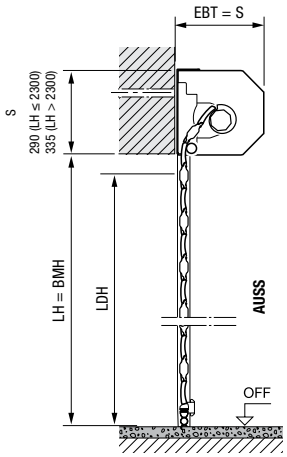

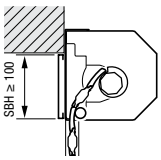

Additional fascia panel protrudes into the opening.

Dimensions in mm

Explanations

BMB	Ordering size width
BMH	Ordering size height
LB	Clear width
LH	Clear height
LDB	Clear passage width
LDH	Clear passage height
EBT	Fitting depth
S	Required headroom
SBH	Additional fascia panel height
OFF	Finished floor level (FFL)
AUSS	Exterior

Fitting depth EBT	
Up to LH = 2300 mm	290 mm
From LH = 2301 mm	335 mm
Required headroom S **Additional fascia panel SBH**	
Up to LH = 2300 mm	290 mm
From LH = 2301 mm	335 mm
Clear passage height LDH	
With operator	LH – 100 mm
Manually operated	LH – 125 mm
Side space requirement	115 mm
External roller garage door operator side	215 mm

Performance characteristics according to European standard 13241

Thermal insulation	
U-value fitted door[3]	5.0 W/(m²·K)
Wind load classes	
Up to LB = 3000 mm	Class 5
Up to LB = 4000 mm	Class 4
Up to LB = 4500 mm	Class 3
From LB = 4500 mm	Class 2
Water tightness under heavy rain	Class 2

1) For a visually balanced look the curtain cover can be ordered symmetrically!
2) At least 5 mm distance from fascia panel / boom

The U-values for fitted doors without glazing elements with the dimensions 2500 × 2000 mm

Dimensions and technical manual

Garage horizontal door RollMatic OD

Door appearance

Garage horizontal door

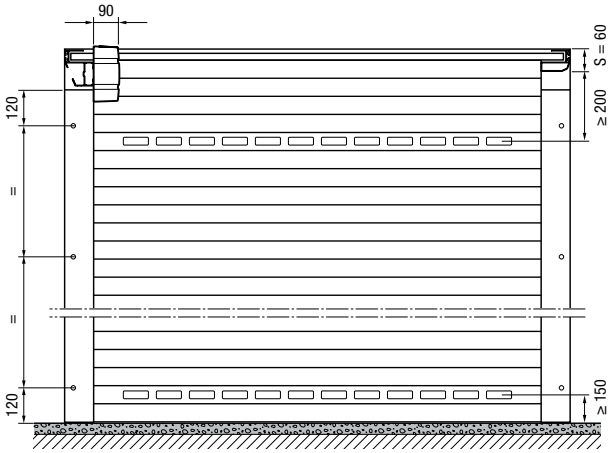

Fitting behind the opening

Overhead door, view fitting side

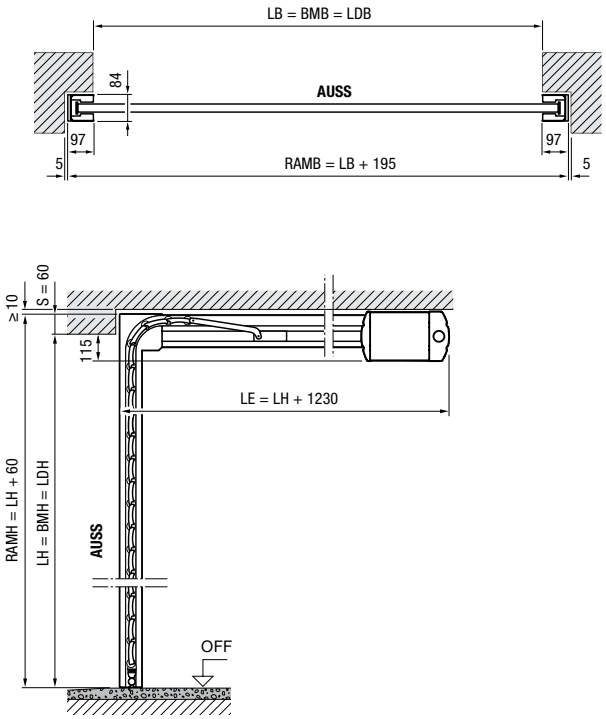

Fitting in the opening

Overhead door, view fitting side

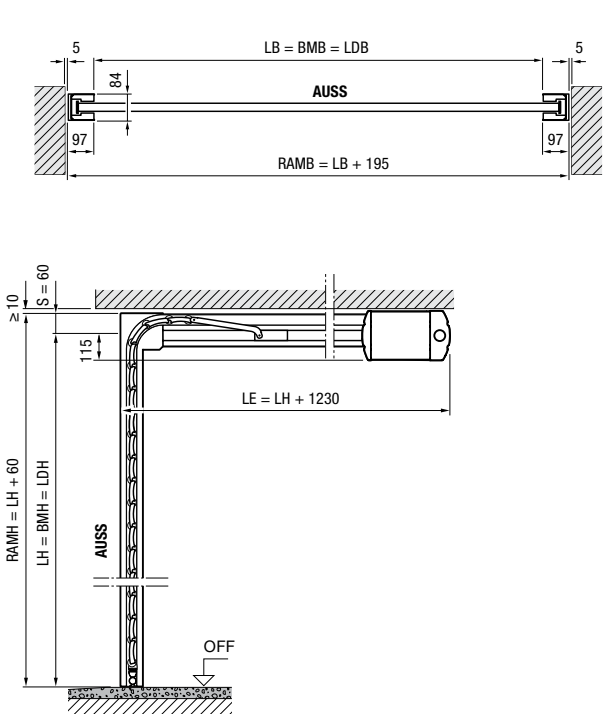

Dimensions in mm

Size range for garage horizontal door RollMatic OD*

Clear height (LH)	1250	1500	1750	2000	2250	2500	2750	3000	3250	3500
3000										
2875										
2750										
2625										
2500										
2375										
2250										
2125										
2000										
1875										
1700										

Clear width (LB)

* when fitting in the opening flush-fitting with panel 95:

Set 1 Door width LB ≤ 3150 mm
Door height LH ≤ 2700 mm

Set 2 Door width LB ≤ 3500 mm
Door height LH ≤ 2700 mm

Flush-fitting in the opening with panel 95

Overhead door, view fitting side

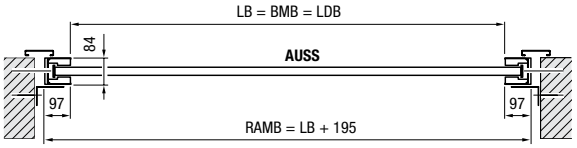

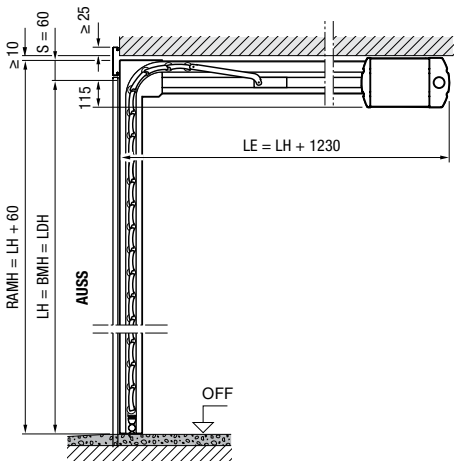

Dimensions in mm

Explanations

BMB	Ordering size width
BMH	Ordering size height
LB	Clear width
LH	Clear height
LDB	Clear passage width
LDH	Clear passage height
RAMB	Overall frame dimension width
RAMH	Overall frame dimension height
LE	Distance back with operator
S	Required headroom
OFF	Finished floor level (FFL)
AUSS	Exterior

Side space requirement	102 mm

Performance characteristics according to European standard 13241

Thermal insulation	
U-value fitted door*	5.6 W/(m²·K)
Wind load classes	
Up to LB = 3000 mm	Class 3
Up to LB = 3500 mm	Class 2
Water tightness under heavy rain	Class 2

* U-values for installed doors without glazing elements in the size 2500 × 2200 mm

Dimensions and technical manual

Side doors

Side door with block frame
Fitting behind the opening,
opening inwards

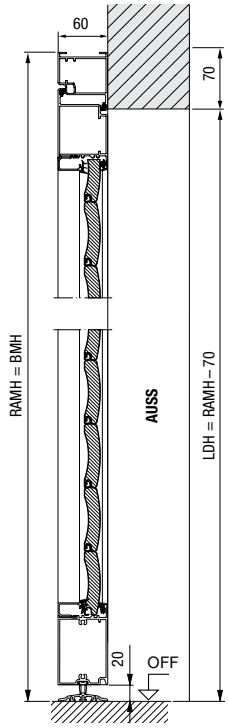

Side door with block frame
Fitting in the opening,
opening inwards

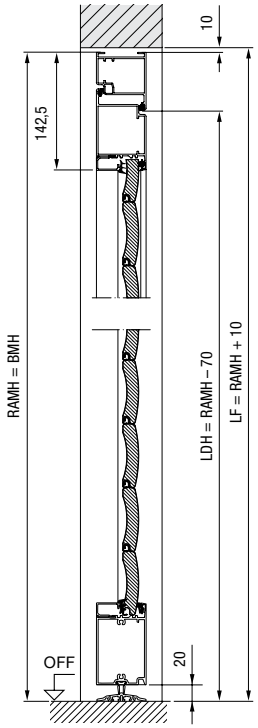

Side door with block frame
Fitting in the opening,
opening outwards

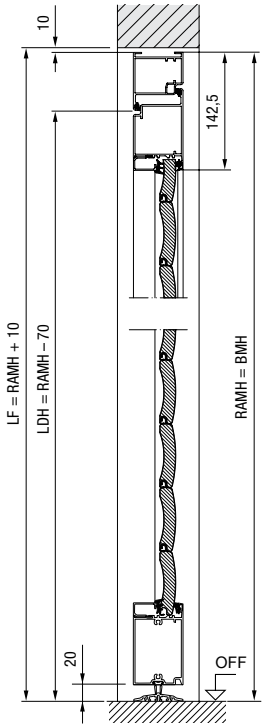

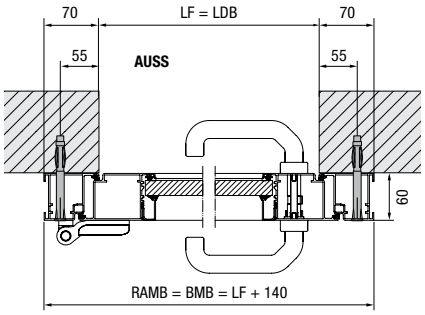

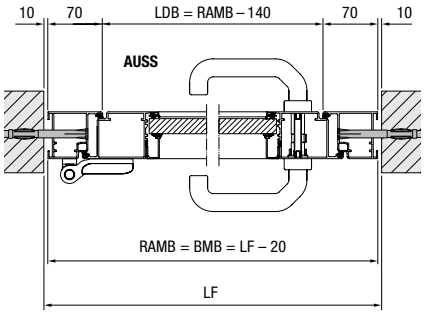

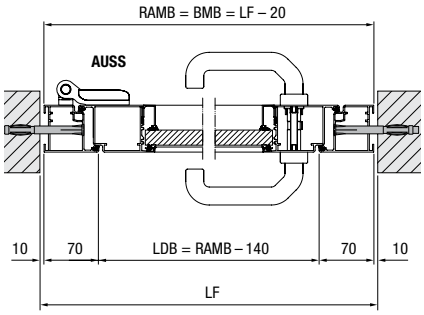

Dimensions in mm

Side door with corner frame

Internal fitting, opening inwards

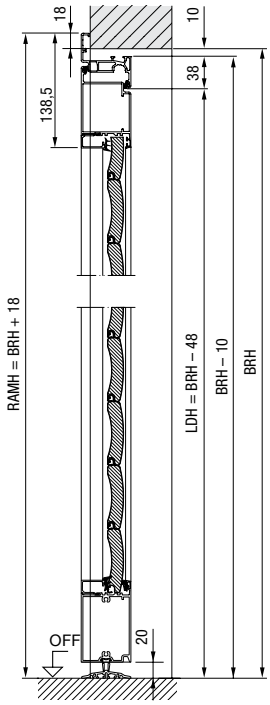

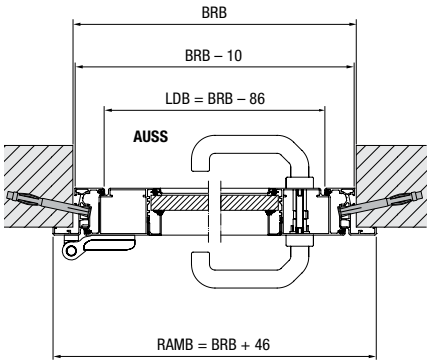

Side door with corner frame

External fitting, opening outwards

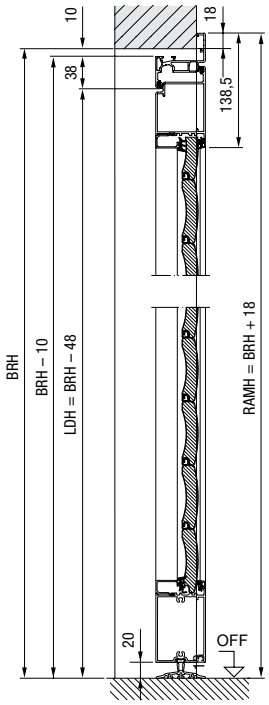

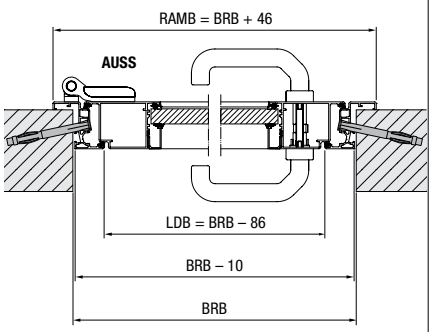

Dimensions in mm

Explanations

BRB	Nominal size width
BRH	Nominal height
BMB	Ordering size width
BMH	Ordering size height
LDB	Clear passage width
LDH	Clear passage height
LF	Structural opening
RAMB	Overall frame dimension width
RAMH	Overall frame dimension height
OFF	Finished floor level (FFL)
AUSS	Exterior

Performance characteristics according to European standard EN 14351-1

Thermal insulation

U-value fitted door*	5.6 W/(m²·K)

Wind load classes

single-leaf	Class 4A

In relation to door size 1250 × 2200 mm

Material
Door leaf frame made of extruded aluminium profiles with roller garage door section infill, position of the sections does not match roller garage door RollMatic, use of glazing and ventilation grille corresponds with roller garage door RollMatic.

Hörmann.
For Life.

Whether you are building your home or modernising it, you desire a place full of joy, security and relaxation. Thanks to their sustainable and particularly durable quality, Hörmann products will become a reliable part of your home – made to last for generations.

GARAGE DOORS. GATE AND DOOR OPERATORS. SMART HOME SYSTEMS. ENTRANCE DOORS. RESIDENTIAL INTERNAL DOORS. LOFT DOORS. STEEL DOORS. DOOR FRAMES. STORAGE SPACE SYSTEMS.

Some of the products shown feature special equipment and do not always correspond to the standard versions. The surface finishes and colours shown are subject to the limitations of the printing process and cannot be regarded as binding. All RAL colours are based on the RAL colour chart. All rights reserved. No part may be reproduced without our prior permission. Subject to changes.

Status 02.2026 / Printed 05.2026 / HF 85900 EN-United Kingdom / MD08189 / PDF / Printed on 100% recycled paper

HÖRMANN